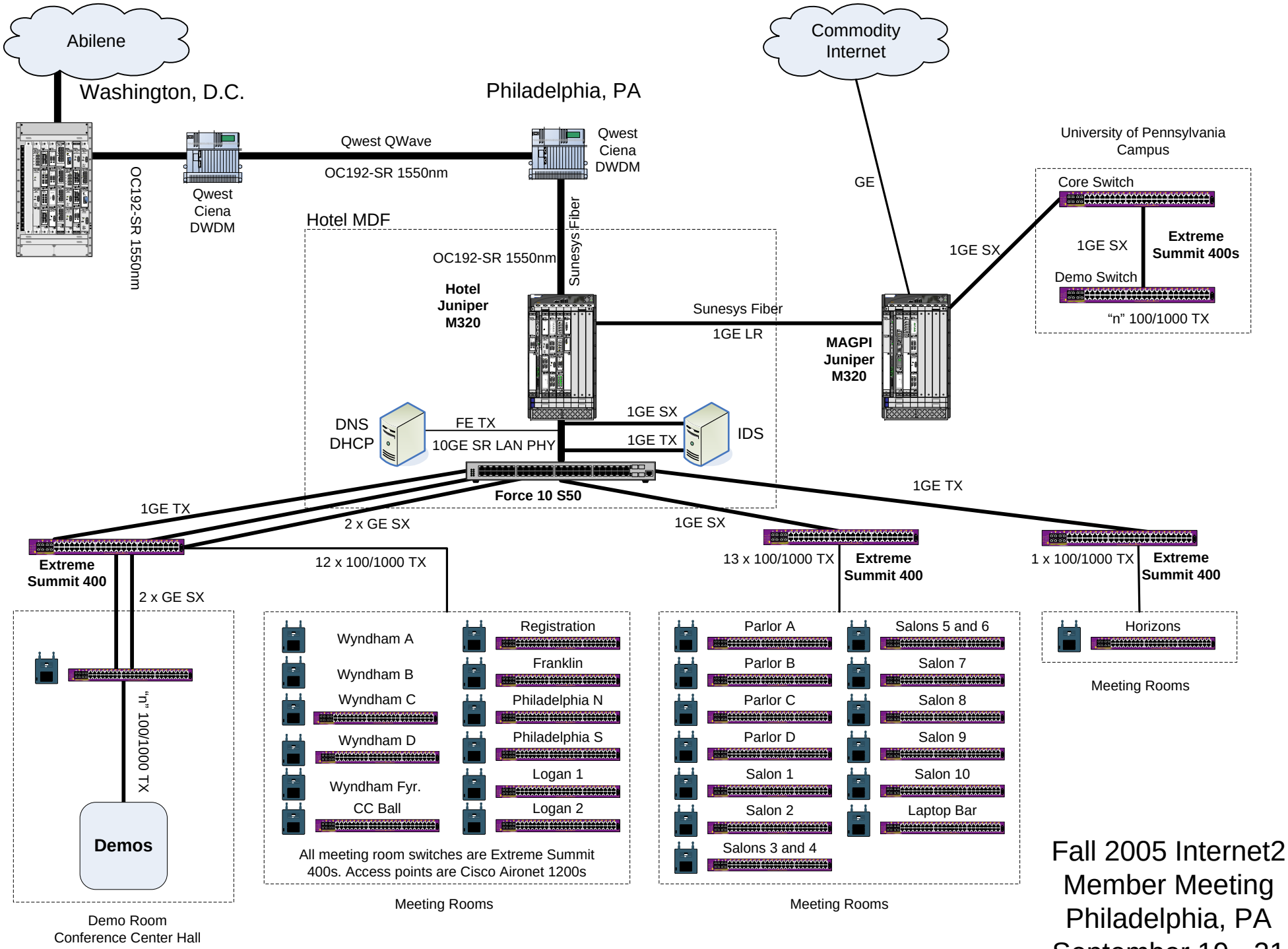

Fall 2005 Internet2
Member Meeting
Philadelphia, PA
September 19 - 21